Female and male cable coupler MC4

Contacts on carrier band (including insulating part)

PV-KBT4...
PV-KST4...

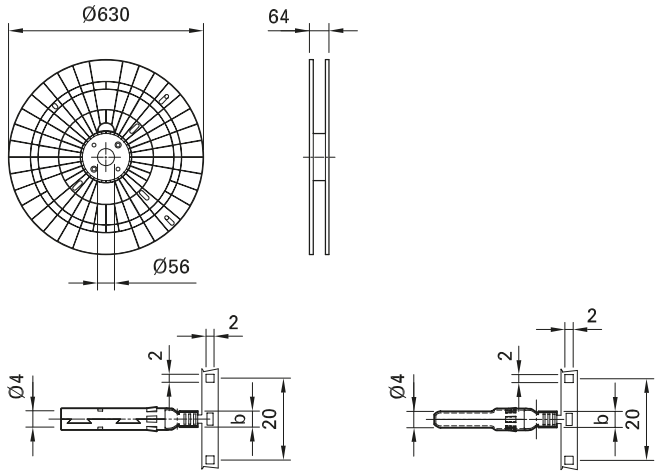

Order No.	Type	Female cable coupler	Male cable coupler	Ø range of cable gland	Conductor cross section			Crimping tool	Contacts per reel[2]	Approvals			
				A (mm)	mm²	AWG	b (mm)			TÜV			
32.0010P2000-UR	PV-KBT4/2,5I-UR	×		5-6	2.5	14	3	[1]	2000	×	×	×	×
32.0011P2000-UR	PV-KST4/2,5I-UR		×	5-6	2.5	14	3	[1]	2000				
32.0140P2000-UR	PV-KBT4/2,5X-UR	×		5.5-7.4	2.5	14	3	[1]	2000				
32.0141P2000-UR	PV-KST4/2,5X-UR		×	5.5-7.4	2.5	14	3	[1]	2000				
32.0012P2000-UR	PV-KBT4/2,5II-UR	×		5.9-8.8	2.5	14	3	[1]	2000				
32.0013P2000-UR	PV-KST4/2,5II-UR		×	5.9-8.8	2.5	14	3	[1]	2000				
32.0014P2000-UR	PV-KBT4/6I-UR	×		5-6	4; 6	12; 10	5	[1]	2000				
32.0015P2000-UR	PV-KST4/6I-UR		×	5-6	4; 6	12; 10	5	[1]	2000				
32.0142P2000-UR	PV-KBT4/6X-UR	×		5.5-7.4	4; 6	12; 10	5	[1]	2000				
32.0143P2000-UR	PV-KST4/6X-UR		×	5.5-7.4	4; 6	12; 10	5	[1]	2000				
32.0016P2000-UR	PV-KBT4/6II-UR	×		5.9-8.8	4; 6	12; 10	5	[1]	2000				
32.0017P2000-UR	PV-KST4/6II-UR		×	5.9-8.8	4; 6	12; 10	5	[1]	2000				
32.0034P1700	PV-KBT4/10II	×		5.9-8.8	10	–	7.2	[1]	1700	×			×
32.0035P1700	PV-KST4/10II		×	5.9-8.8	10	–	7.2	[1]	1700				

Note:
For more detailed information concerning the suitable cable gland range, please consult MA231

MA

Assembly Instructions MA231
www.staubli.com/electrical

Sealing caps page 43
Assembly tools page 48

- Feeder bands for fully automatic assembly
- Tools specially designed for MC4 are available for automatic crimping
- Process reliability as result of specially developed supply reel

Technical data	
Connector system	Ø 4 mm
Rated voltage	1000 V DC (IEC 62852) 1500 V DC (2Pfg2330)[3] 1500 V DC (UL)[4]
Rated current TÜV (85°C)	22.5 A (2.5 mm²) 39 A (4 mm²/6 mm²) 45 A (10 mm²)
Rated current UL	30 A (14 AWG) 30 A (12 AWG/10 AWG) 50 A (8 AWG)
Rated impulse voltage	12 kV (1000 V DC (TÜV)) 16 kV (1500 V DC (TÜV))
Ambient temperature range	-40°C...+85°C (TÜV); -40°C...+75°C (UL)
Upper limiting temperature	105°C (TÜV)
Degree of protection, mated unmated	IP65, IP68 (1 h/1 m) IP2X
Overvoltage category/Pollution degree	CATIII/3
Contact resistance of plug connectors	≤ 0.25 mΩ
Safety class	1000 V DC: II 1500 V DC: 0
Contact system	MULTILAM
Type of termination	Crimping
Contact material	Copper, tin plated
Insulation material	PC/PA
Locking system (UL)	Locking type
Flame class	UL94-V0
Ammonia resistance (acc. to DLG)	1500 h, 70°C/70% RH, 750 ppm
Salt mist spray test, degree of severity 6	IEC 60068-2-52
TÜV-Rheinland certified, in accordance with IEC 62852 TÜV-Rheinland certified, in accordance with 2PfG2330 UL recognized component, in accordance with UL 6703 CSA certified, in accordance with UL 6703 CQC certified according CNCA/CTS0002-2012	R60127190[5] R60087448 E343181 250725 CQC16024138286

[1] Information about a semi-automatic crimp device or assembly device on request
[2] Reel type subject to alterations
[3] 2Pfg2330: Only for use in PV-systems with restricted access locations
[4] For selected configurations; see assembly instructions MA231 for details
[5] For PV junction boxes in accordance with IEC62790, lines in accordance with EN50618 must be used